Materials Brass or steel with opal sandblasted glass

Dimensions 18 1/2 (47 cm) W x 59 1/4 in(151 cm) D x 42 1/2 in(108 cm) H

Weight 22 lbs (10 kg)

Packing 40 in (102 cm) W x 8 in (20 cm) D x 50 in (127 cm) H
26 lbs (12 kg)

Backplate 1 1/4 in (3 cm) W x 1 3/4 in (0.5 cm) D x 8 1/2 in (21.5 cm) H
J-box location at center

Lamping 1 x G8 socket
G8 LED bulb (provided)
4W 2700K
350 lm

Finishes

Shade

- Satin white
- Satin brass

Frame

- Satin brass
- Satin black
- Chrome

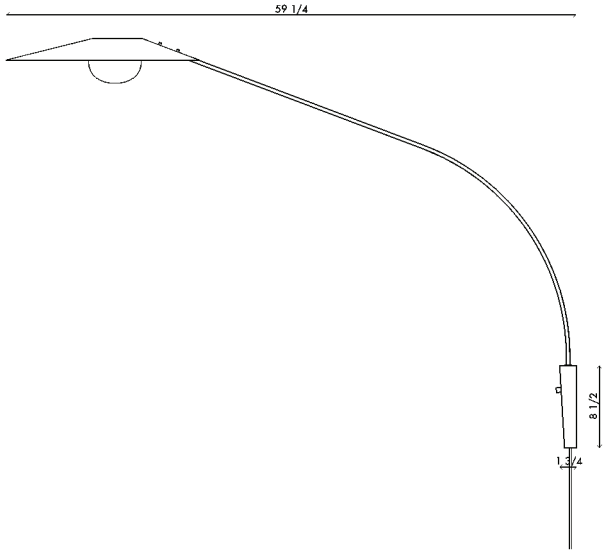

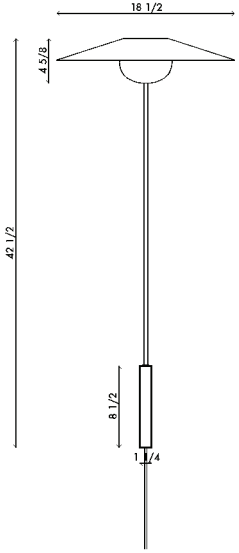

Bulb life 25,000 hrs

Dimming 10-100%. Wattage +/- 10%
Lumen Values +/- 5Lms
CRI +/- 5%
Fully tested with LUTRON© DVCL, DVEL

Voltage 120 V/240

Certification UL, CE listed

Handmade in Los Angeles
Hardwired
ADA compliant

Materials	Brass or steel with opal sandblasted glass
Dimensions	18 1/2 (47 cm) W x 32 1/2 in (83 cm) D x 38 1/2 in (98 cm) H
Weight	18 lbs (8 kg)
Packing	46 in (117 cm) W x 36 in (91.4 cm) D x 24 in (61 cm) H 22 lbs (10 kg)
Backplate	1 1/4 in (3 cm) W x 1 3/4 in (0.5 cm) D x 8 1/2 in (21.5 cm) H J-box location at center
Lamping	1 x G8 socket G8 LED bulb (provided) 4W 2700K 350 lm

Finishes

Shade

- Satin white
- Satin brass

Frame

- Satin brass
- Satin black
- Chrome

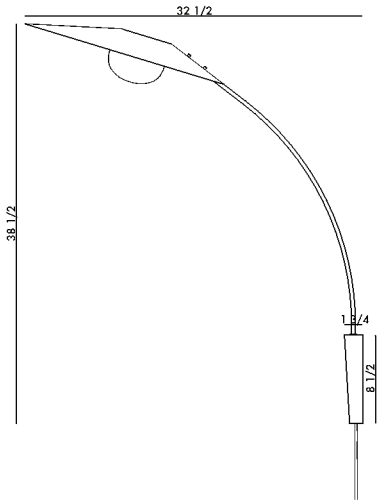

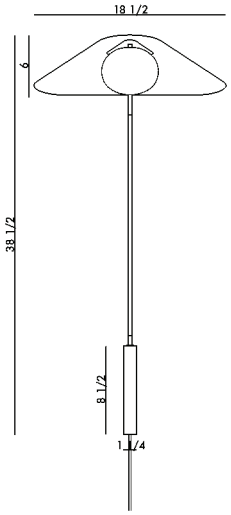

Bulb life	25,000 hrs
Dimming	10-100%. Wattage +/- 10% Lumen Values +/- 5Lms CRI +/- 5% Fully tested with LUTRON© DVCL, DVEL
Voltage	120 V/240
Certification	UL, CE listed

Handmade in Los Angeles
Hardwired
ADA compliant